6 mm Square Carbon Composition Trimmer Potentiometers, Dustproof (6FE)

Type: **EVND**

Malaysia

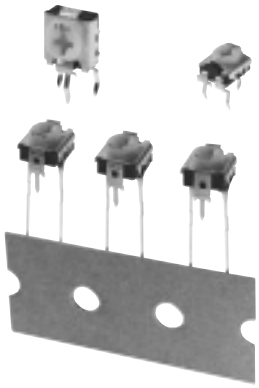

■ Features

- Top-adjust or side-adjust available
- Highly efficiency automatic insertion with radial taping package
- High reliability (dustproof construction)

■ Recommended Applications

- Audio Visual Equipment, Home Electrical Appliances

■ Explanation of Part Numbers

1	2	3	4	5	6	7	8	9	10	11	12
E	V	N	D			A	O	3	B		
Product Code			Structure		Material Special	Knob Trims & Knob Length			Taper & Resistance		

■ Majo Specifications

Electrical Specifications	Nominal Total Resistance	100 Ω to 1 MΩ
	Taper	B
	Rating	R≦500 kΩ : 0.1 W 50 V (50 °C) R>500 kΩ : 0.1 W 25 V (50 °C)
	Residual Resistance	R≦1 kΩ : 30 Ω max., 1 kΩ<R≦2 kΩ : 60 Ω max. 2 kΩ<R≦1 MΩ : 3 % max., or 200 Ω max. whichever smaller
Mechanical Specifications	Rotation Angle	210 °±20 °
	Rotation Torque	2 mN·m to 25 mN·m
	Stopper Strength	Surface : 75 mN·m, reverse side : 35 mN·m
Endurance	Rotation Life	100 cycles
	Resistance to Soldering Heat	240 °C to 280 °C : 5 s max., 280 °C to 300 °C : 3 s max.
	Resistance to Damp	After 350 hours : R≦100 kΩ+15 % –0 %, : 100 kΩ<R≦1 MΩ+20 % –0 %
	Endurance under Damp	After 350 hours : 1.5 h ON 0.5 h OFF : R≦100 kΩ±15 %, : 100 kΩ<R≦1 MΩ±20 %
	Endurance under High Temperature	70 °C±3 °C After 250 hours +5 %, –15 %
Minimum Quantity/Packing Unit		EVND2A, EVND8A : 500 pcs. (Vinyl Bag) EVNDJA, EVNDXA, EVNDCA : 1000 pcs. (Radial Taping)
Quantity/Carton		EVND2A, EVND8A : 5000 pcs. EVNDJA, EVNDXA, EVNDCA :10000 pcs.

Note : R=Nominal Total Resistance

Design and specifications are each subject to change without notice. Ask factory for the current technical specifications before purchase and/or use.
Should a safety concern arise regarding this product, please be sure to contact us immediately.

■ Dimensions in mm (not to scale)

● Side-adjust EVND2A

No. 1

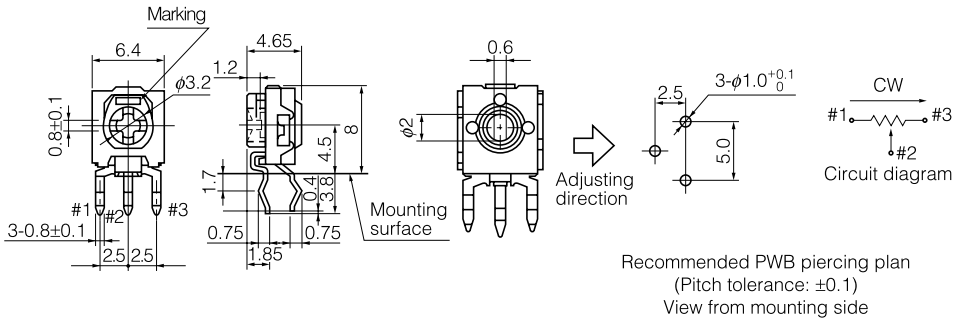

Knob color	Orange yellow

● Top-adjust EVND8A

No. 2

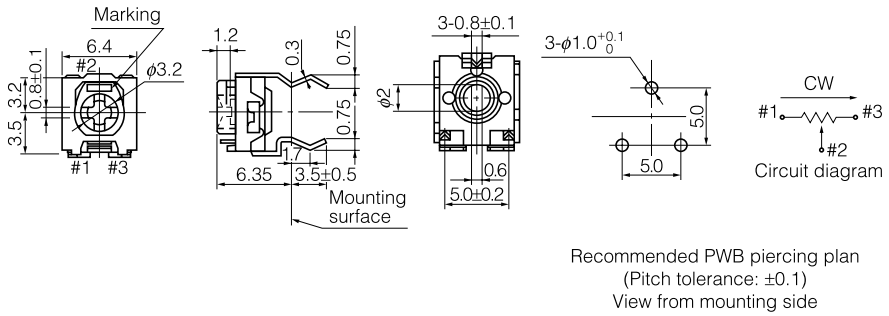

Knob color	Orange yellow

Design and specifications are each subject to change without notice. Ask factory for the current technical specifications before purchase and/or use.
Should a safety concern arise regarding this product, please be sure to contact us immediately.

■ Radial Taping Products

- Based on EIAJ RC-1008
- Triangular terminal layout for better mounting

● Top-adjust ..... EVNDJA

No. 3

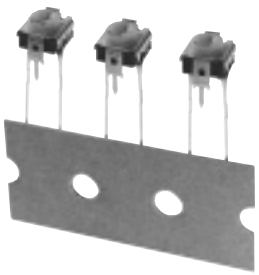

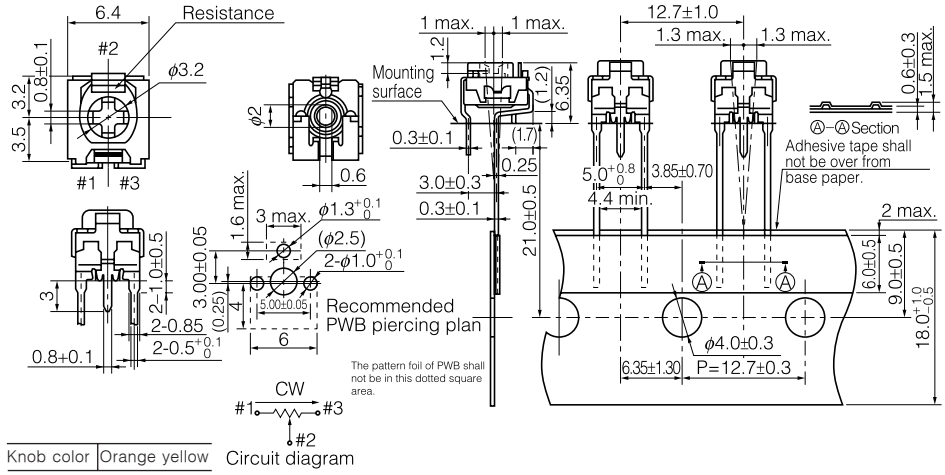

Knob color	Orange yellow

● Top-adjust ..... EVNDXA

No. 4

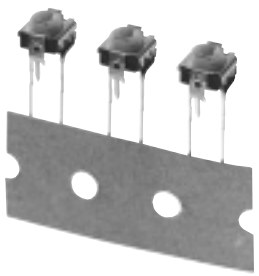

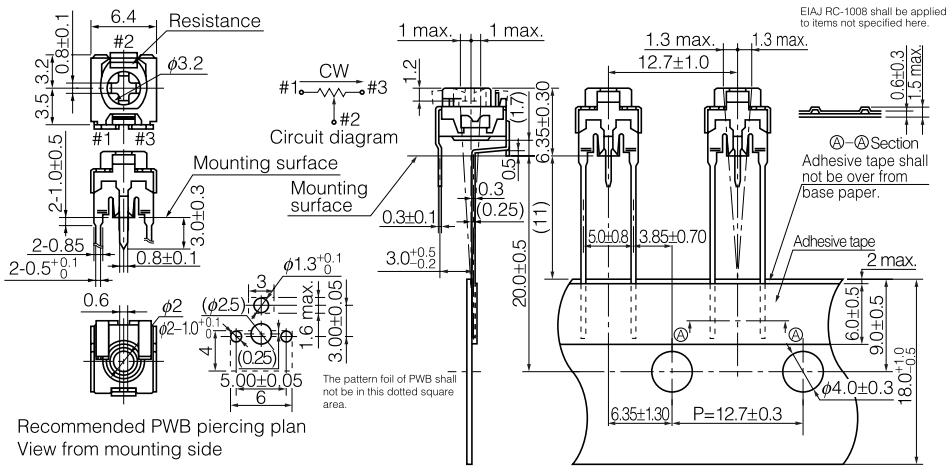

Knob color	Orange yellow

● Side-adjust ..... EVNDCA

No. 5

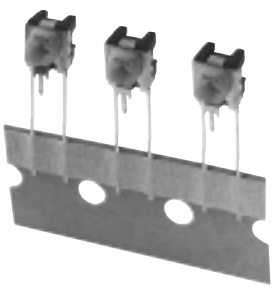

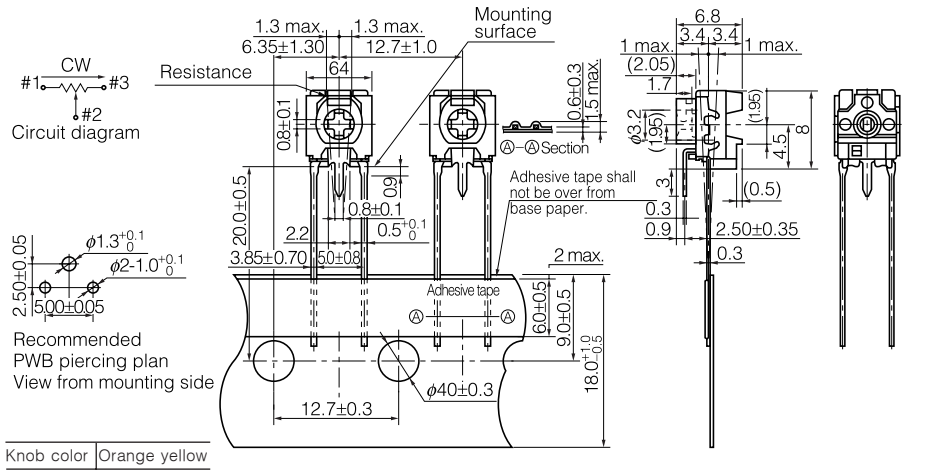

Knob color	Orange yellow

Design and specifications are each subject to change without notice. Ask factory for the current technical specifications before purchase and/or use.
Should a safety concern arise regarding this product, please be sure to contact us immediately.